Hola

– El cuaderno y la escoba engarzada –

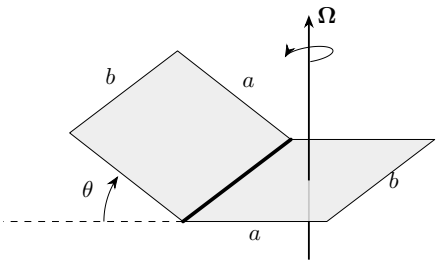

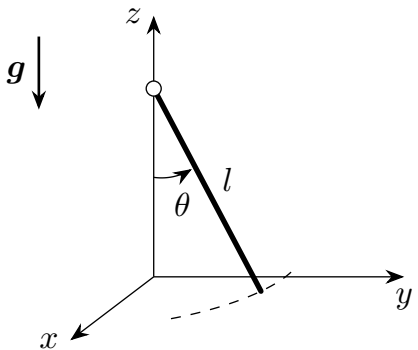

$$T = T_{\mathrm{cm}} + T_{\mathrm{rot}}$$

$$T = T_{\text{cm}} + T_{\text{rot}}$$

$$T = T_{\mathrm{cm}} + T_{\mathrm{rot}}$$

$$T = T_{\text{cm}} + T_{\text{rot}}$$

$$T_{\text{rot}} = \frac{1}{2} I_1 \left(\Omega_1\right)^2 + \frac{1}{2} I_2 \left(\Omega_2\right)^2 + \frac{1}{2} I_3 \left(\Omega_3\right)^2$$

$$T = T_{\text{cm}} + T_{\text{rot}}$$

$$T_{\text{rot}} = \frac{1}{2} I_1 (\Omega_1)^2 + \frac{1}{2} I_2 (\Omega_2)^2 + \frac{1}{2} I_3 (\Omega_3)^2$$

$$T = T_{\text{cm}} + T_{\text{rot}}$$

$$T_{\text{rot}} = \frac{1}{2} I_1 \left(\Omega_1\right)^2 + \frac{1}{2} I_2 \left(\Omega_2\right)^2 + \frac{1}{2} I_3 \left(\Omega_3\right)^2$$

$$T = T_{\text{cm}} + T_{\text{rot}}$$

$$T_{\text{rot}} = \frac{1}{2} I_1 (\Omega_1)^2 + \frac{1}{2} I_2 (\Omega_2)^2 + \frac{1}{2} I_3 (\Omega_3)^2$$

$$\boldsymbol{\Omega} = \Omega_1 \hat{1} + \Omega_2 \hat{2} + \Omega_3 \hat{3}$$

$$T = T_{\text{cm}} + T_{\text{rot}}$$

$$T_{\text{rot}} = \frac{1}{2} I_1 \left(\Omega_1\right)^2 + \frac{1}{2} I_2 \left(\Omega_2\right)^2 + \frac{1}{2} I_3 \left(\Omega_3\right)^2$$

$$\boldsymbol{\Omega} = \Omega_1 \hat{1} + \Omega_2 \hat{2} + \Omega_3 \hat{3} = \dot{\varphi}\, \hat{z} + \dot{\theta}\, \hat{n} + \dot{\psi}\, \hat{3}$$

$$T = T_{\text{cm}} + T_{\text{rot}}$$

$$T_{\text{rot}} = \frac{1}{2} I_1 \left(\Omega_1\right)^2 + \frac{1}{2} I_2 \left(\Omega_2\right)^2 + \frac{1}{2} I_3 \left(\Omega_3\right)^2$$

$$\boldsymbol{\Omega} = \Omega_1 \hat{1} + \Omega_2 \hat{2} + \Omega_3 \hat{3} = \dot{\varphi}\, \hat{z} + \dot{\theta}\, \hat{n} + \dot{\psi}\, \hat{3}$$

$$\Omega_1 = \dot{\varphi} \sin\theta \sin\psi + \dot{\theta} \cos\psi$$

$$\Omega_2 = \dot{\varphi} \sin\theta \cos\psi - \dot{\theta} \sin\psi$$

$$\Omega_3 = \dot{\varphi} \cos\theta + \dot{\psi}$$

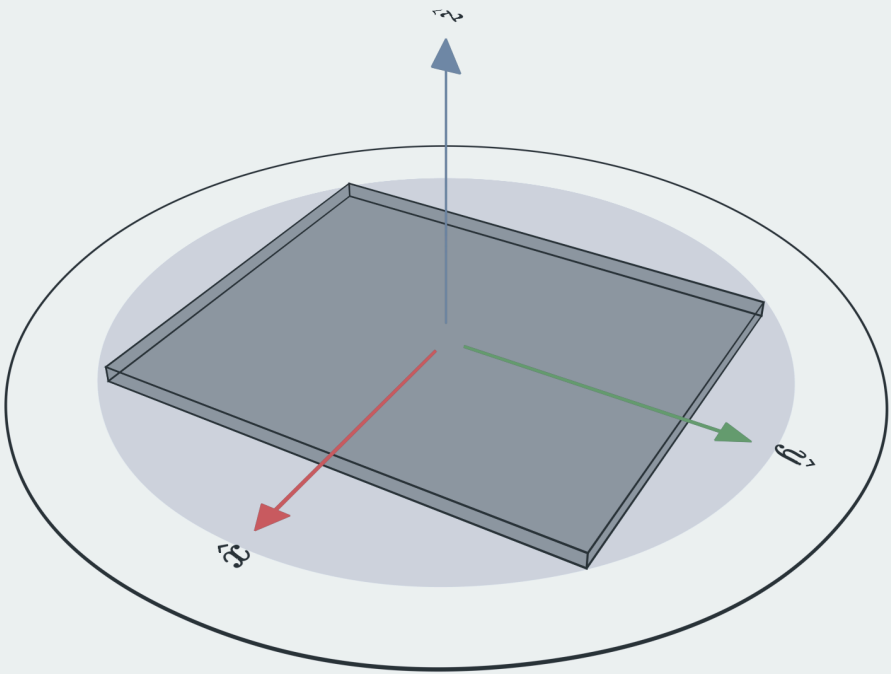
z2
z1
z3

– El cuaderno –

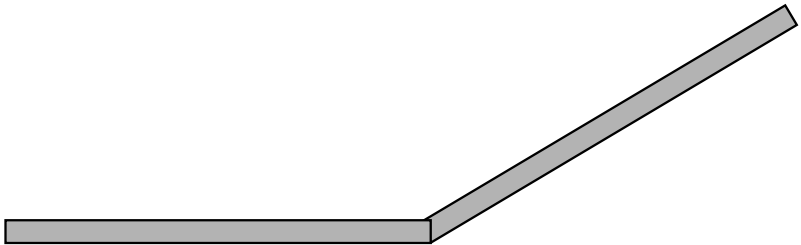

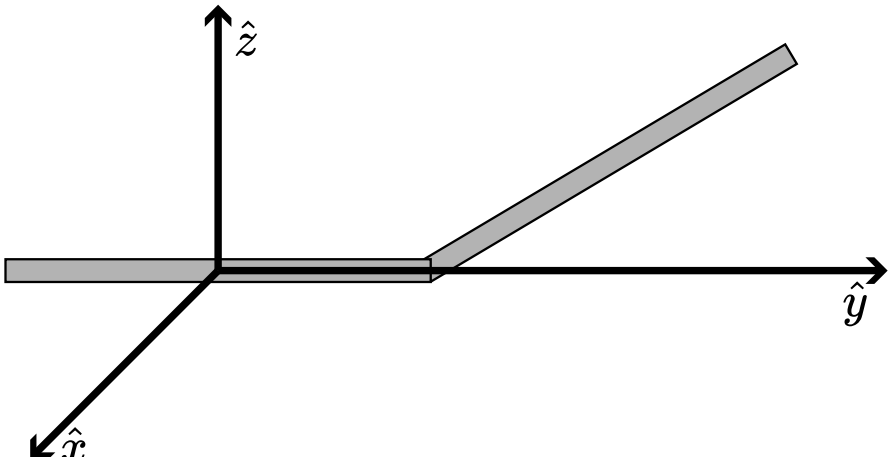
$\hat{z}$
$\hat{y}$
$\hat{x}$

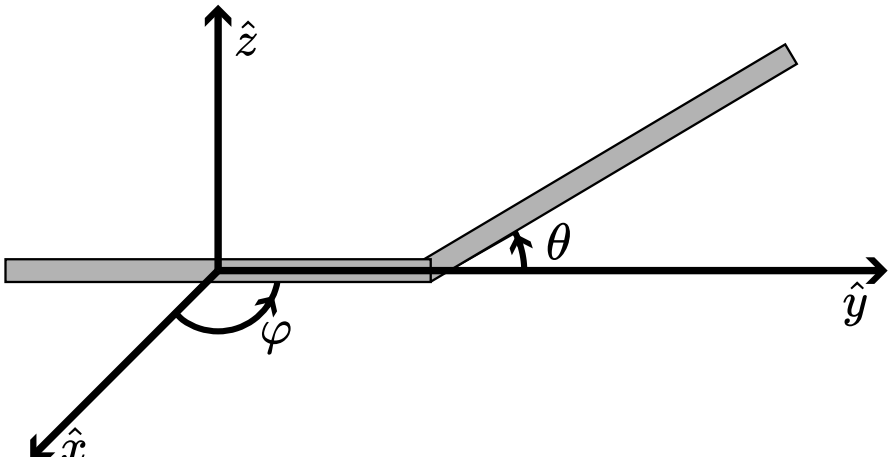
$\hat{z}$
θ
$\hat{y}$
φ
$\hat{x}$

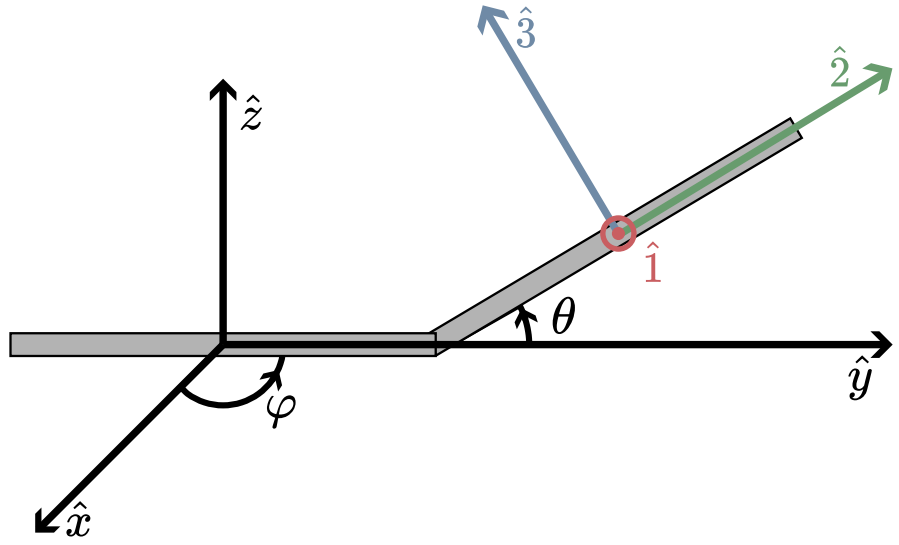
$\hat{3}$
$\hat{2}$
$\hat{z}$
$\hat{1}$
θ
$\hat{y}$
φ
$\hat{x}$

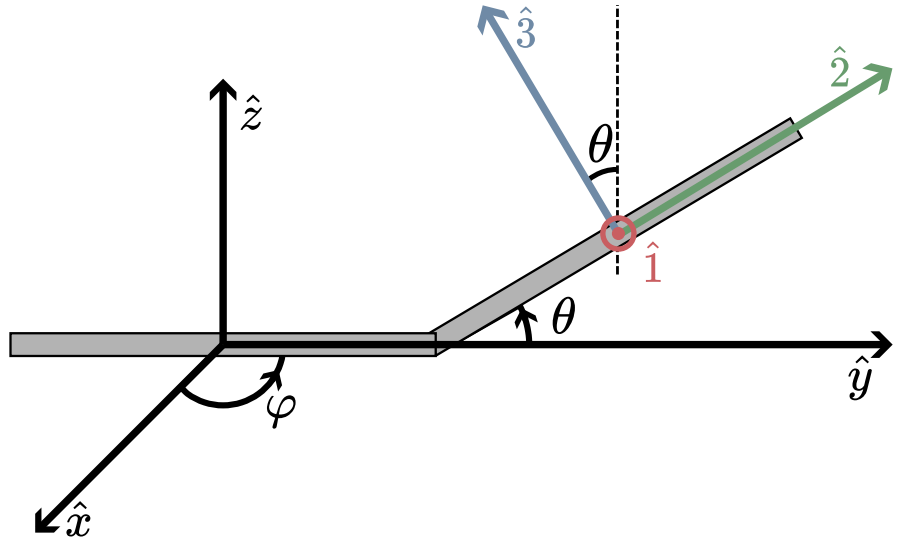
$\hat{3}$
$\hat{2}$
$\hat{z}$
θ
$\hat{1}$
θ
$\hat{y}$
φ
$\hat{x}$

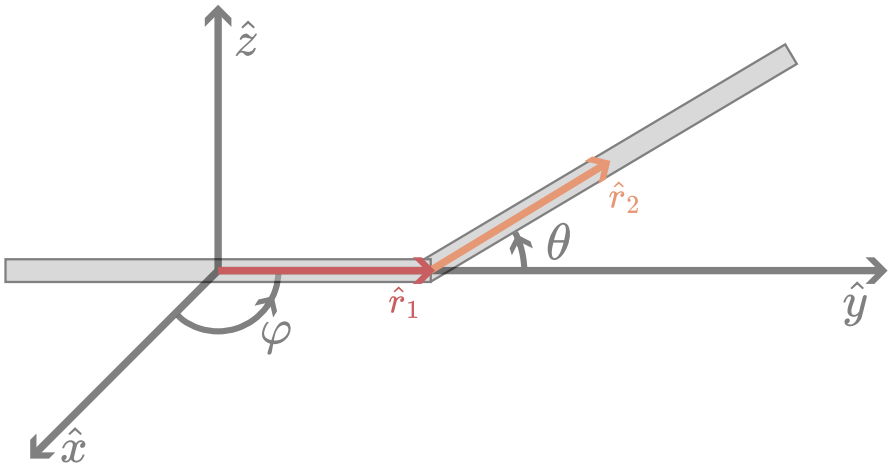
$\hat{z}$
$\hat{r}_2$
θ
$\hat{r}_1$
$\hat{y}$
φ
$\hat{x}$

Esto es todo